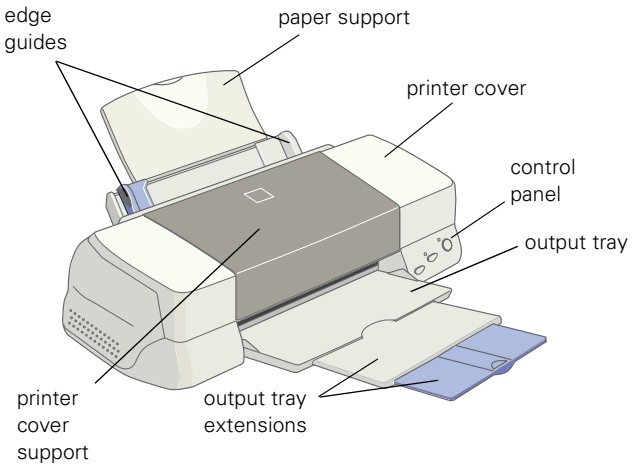


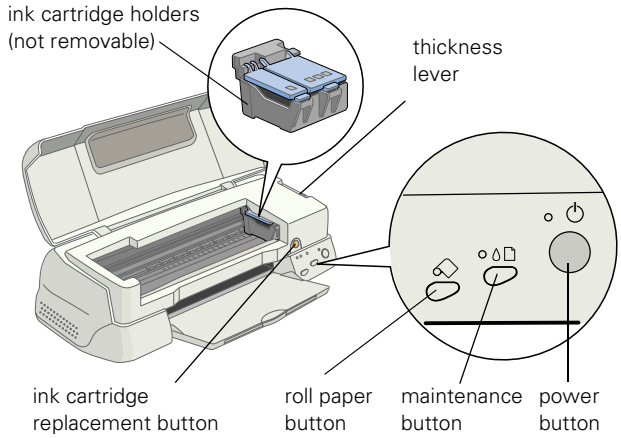


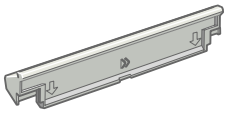

roll paper adapter

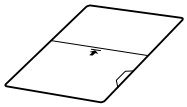

uncurling sheet

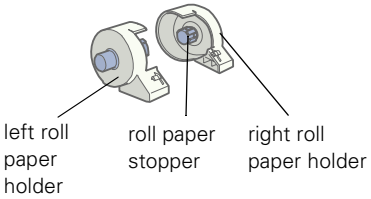


# Accessories

## User Replaceable Parts

| Part name | Reference number | Part number |
|---|---|---|
| Printer cover | 101 | 1050101 |
| Printer cover support | 110 | 1059610 |
| Paper support assembly, including rear paper support | 102 | 1043087 |
| Logo plate B | 115 | 1051170 |
| Caution label | 180 | 1061183 |
| Model name label | 181 | 1063221 |
| Paper set label | 182 | 1051405 |
| Roll paper adapter | 800 | 1059609 |
| Left roll paper holder | 801 | 1058169 |
| Right roll paper holder | 802 | 1058170 |
| Roll paper stoppers | 803 | 1058171 |
| Uncurling sheet | 805 | 1052356 |

## Ink Cartridges

| Cartridge | Part number |
|---|---|
| Black | U.S.: T007201; Canada: T007311 |
| Color | U.S.: T009201; Canada: T009311 |

## Media

| Media name | Size | Part number |
|---|---|---|
| EPSON 360 dpi Ink Jet Paper | Letter<br>A4<br>A3<br>Super B | S041060<br>S041258<br>S040165<br>S041066 |
| EPSON High Quality Ink Jet Paper | Letter | S041111 |
| EPSON Photo Quality Ink Jet Paper | Letter<br>Legal<br>A3<br>A4<br>B<br>Super B | S041062<br>S041067<br>S041068<br>S041061<br>S041070<br>S041069 |
| EPSON Photo Quality Glossy Film | Letter<br>A6<br>A4<br>A3<br>B<br>Super B | S041072<br>S041107<br>S041071<br>S041073<br>S041075<br>S041074 |
| EPSON Photo Paper | Letter (20 sheets)*<br>Letter (100 sheets)*<br>Letter (500 sheets)*<br>4 × 6 inches (perforated)<br>4 × 6 inches (no perforations)*<br>Panoramic<br>A4<br>Roll (3.9 inches × 26.2 ft)*<br>Roll (13 inches × 32.8 ft)* | S041141<br>S041271<br>S041272<br>S041134<br>S041458<br>S041145<br>S041140<br>S041279<br>S041233 |

| Media name | Size | Part number |
|---|---|---|
| EPSON Ink Jet Transparencies | Letter<br>A4 | S041064<br>S041063 |
| EPSON Photo Quality Ink Jet Cards | A6 | S041054 |
| EPSON Photo Stickers Kit (CD-ROM and paper)<br>EPSON Photo Stickers (refill, paper only) | A6, 16 frames per sheet<br>A6, 16 frames per sheet | S041144-KIT<br>S041144 |
| EPSON Iron-On Cool Peel Transfer Paper | Letter (10 sheets)<br>Letter (50 sheets) | S041153<br>S041155 |
| EPSON Photo Quality Self Adhesive Sheets | A4 | S041106 |
| Matte Paper - Heavyweight | Letter*<br>A4<br>8 × 10 inches*<br>11 × 14 inches* | S041257<br>S041258<br>S041467<br>S041468 |
| EPSON Premium Glossy Photo Paper | Letter*<br>5 × 7 inches*<br>A4<br>8 × 10 inches*<br>11 × 14 inches*<br>Roll (3.9 inches × 26.2 feet)*<br>Roll (8.3 inches × 26.2 feet)<br>Roll (13 inches × 32.8 feet)* | S041286<br>S041464<br>S041285<br>S041465<br>S041466<br>S041302<br>S041376<br>S041378 |
| EPSON Premium Semigloss Photo Paper | Letter*<br>Super B<br>A4<br>Roll (3.9 inches × 26.2 feet)* | S041286<br>S041327<br>S041332<br>S041329 |
| EPSON Premium Luster Photo Paper | Letter*<br>A3<br>Super B<br>Roll (8.3 inches × 26.2 feet)<br>Super B Roll (13 inches × 32.8 feet)* | S041405<br>S041406<br>S041407<br>S041408<br>S041409 |
| EPSON Glossy Photo Greeting Cards | Letter* | S041267 |

* Supports true BorderFree™ (borderless) printing

## Printer Specifications

### Printing

| | |
|---|---|
| Printing method | On-demand ink jet |
| Nozzle configuration | |
| Black | 48 nozzles |
| Color | 240 nozzles (48 each: cyan, magenta, yellow, light cyan, light magenta) |
| Resolution | Maximum 2880 dpi × 720 dpi |
| Print direction | Bidirectional with logic seeking |
| Control code | ESC/P Raster,™ EPSON Remote |
| Input buffer | 256KB |
| Interface | USB or IEEE 1284-compatible parallel |

### Mechanical

| | |
|---|---|
| Paper feed method | Friction |
| Paper path | Sheet feeder, rear entry |
| Sheet feeder capacity | 100 sheets of 17 lb (64 g/m$^2$) paper |
| Dimensions | |
| Storage | Width: 23.6 inches (609 mm)<br>Depth: 12.2 inches (311 mm)<br>Height: 6.9 inches (175 mm) |
| Printing | Width: 23.6 inches (609 mm)<br>Depth: 30.2 inches (766 mm)<br>Height: 16.3 inches (414 mm) |
| Weight | 18.5 lb (8.4 kg) without the ink cartridges |
| Acoustic noise | 42 dB |

### Electrical

| Specification | 120 V Model | 220–240 V Model |
|---|---|---|
| Input voltage range* | 99 to 132 V | 198 to 264 V |
| Rated frequency range | 50 to 60 Hz | |
| Input frequency range | 49.5 to 60.5 Hz | |
| Rated current | 0.4 A | 0.2 A |
| Power consumption | Approx. 15 W (ISO/IEC 10561 Letter Pattern)<br>Approx. 3 W in standby mode | |

* Check the label on the back of the printer for your printer's voltage.

## Environmental

Temperature

| | |
|---|---|
| Operation | 50 to 95 °F (10 to 35 °C) |
| Storage* | –4 to 104 °F (–20 to 40 °C)<br>1 month at 104 °F (40 °C) |
| Transit* | –4 to 140 °F (–20 to 60 °C)<br>120 hours at 140 °F (60 °C) |

Humidity (without condensation)

| | |
|---|---|
| Operation | 20 to 80% RH |
| Storage* | 5 to 85% RH |

*Stored in shipping container

## Safety Approvals

| | |
|---|---|
| Safety standards | UL 1950, CSA C22.2 No. 950 |
| EMC | FCC part 15 subpart B class B |

## Ink Cartridges

| Specification | Black ink cartridge (T007201) | Color ink cartridge (T009201) |
|---|---|---|
| Color(s) | Black | Cyan, Magenta, Yellow, Light Cyan, Light Magenta |
| Print capacity* | 540 pages (3.5% ECMA at 360 dpi, 370 pages 5% in calculation) | 330 pages (5% each color CcMmY [total 25%] in calculation) |
| Cartridge life | 2 years from production date (if unopened) (within 6 months after opening package, at 77 °F [25 °C]) | |
| Storage temperature | –4 to 104 °F (–20 to 40 °C)<br>1 month at 104 °F (40 °C) | |
| Transit temperature | –22 to 140 °F (–30 to 60 °C)<br>1 month at 104 °F (40 °C)<br>120 hours at 140 °F (60 °C) | |
| Freezing temperature** | 3.2 °F (–16 °C) | –0.4 °F (–18 °C) |
| Dimensions (W × D × H) | 0.8 × 2.6 × 1.5 inches<br>20.1 × 66.85 × 38.5 mm | 1.9 × 3.3 × 1.6 inches<br>49.1 × 84.05 × 41.8 mm |

* The figure given is based on continuous printing after ink replacement. The actual print capacity may vary, depending on how often you turn on the printer and clean the print head.

** Ink thaws and is usable after approximately 3 hours at 77 °F (25 °C).

CAUTION

To ensure good results, use genuine EPSON cartridges and do not refill them. Other products may cause damage to your printer not covered by EPSON's warranties.

Don't use an ink cartridge if the date on the package has expired.

## Paper

| Paper type | Size | Paper types | Thickness | Weight |
|---|---|---|---|---|
| Single sheets | Letter (8.5 × 11 inches)<br>Legal (8.5 × 14 inches)<br>Half letter (statement, 5.5 × 8.5 inches)<br>Executive (7.5 × 10 inches)<br>A4 (210 × 297 mm)<br>A5 (148 × 210 mm)<br>A3 (297 × 420 mm)<br>B (11 × 17 inches)<br>Super B (13 × 19 inches) | Plain bond paper and special ink jet papers distributed by EPSON | 0.003 to 0.004 inch (0.08 to 0.11 mm) for plain bond paper | 17 to 24 lb (64 to 90 g/m$^2$) for plain bond paper |
| Transparencies and Photo Quality Glossy Film | Letter (8.5 × 11 inches)<br>A3 (297 × 420 mm)<br>A4 (210 × 297 mm)<br>A6 (105 × 148 mm), glossy film only<br>B (11 × 17 inches), glossy film only<br>Super B (13 × 19 inches), glossy film only | Transparencies and glossy film distributed by EPSON | — | — |
| Premium Glossy Photo Paper | Letter (8.5 × 11 inches)<br>5 × 7 inches<br>A4 (210 × 297 mm)<br>8 × 10 inches<br>11 × 14 inches<br>Roll (3.9 inches × 26.2 feet)<br>Roll (8.3 inches × 26.2 feet)<br>Roll (13 inches × 32.8 feet) | Premium Glossy Photo Paper distributed by EPSON | — | — |
| Matte Paper - Heavyweight | Letter (8.5 × 11 inches)<br>A4 (210 × 297 mm)<br>8 × 10 inches<br>11 × 14 inches | Matte paper distributed by EPSON | — | — |
| Self-adhesive sheets | A4 (210 × 297 mm) | EPSON Self-adhesive sheets | — | — |
| Envelopes | No. 10, 4.1 × 9.5 inches (104 × 241 mm)<br>DL, 4.3 × 8.7 inches (110 × 220 mm)<br>C6, 4.4 × 6.4 inches (114 × 162 mm)<br>132 × 220 mm (5.2 × 8.7 inches) | Plain, bond, or air mail paper | 0.006 to 0.02 inch (0.16 to 0.52 mm) | 12 to 20 lb (45 to 75 g/m$^2$) |
| Index (ink jet) cards | A6 (105 × 148 mm) | Ink jet cards distributed by EPSON | — | — |
| Photo Paper | Letter (8.5 × 11 inches)<br>A4 (210 × 297 mm)<br>4 × 6 inches (102 × 152 mm)<br>Panoramic (8.3 × 23.4 inches)<br>Roll (3.9 inches × 26.2 feet)<br>Roll (13 inches × 32.8 ft) | Photo paper distributed by EPSON | — | — |
| Photo Stickers | A6 (105 × 148 mm), 16 frames/sheet | Photo stickers distributed by EPSON | — | — |
| Iron-On Cool Peel Transfer Paper | Letter (8.5 × 11 inches) | Transfer paper distributed by EPSON | — | — |

**Note:**
Always load paper into the sheet feeder short edge first, except for envelopes. Load envelopes flap edge first with the flap side down.

Since the quality of any particular brand or type of paper may be changed by the manufacturer at any time, EPSON cannot attest to the quality of any non-EPSON brand or type of paper. Always test samples of paper stock before purchasing large quantities or printing large jobs.

Poor quality paper may reduce print quality and cause paper jams and other problems. If you encounter problems, switch to a higher grade of paper. Do not load curled or folded paper.

Use papers under these conditions:
Temperature: 59 to 77 °F (15 to 25 °C)
Humidity: 40 to 60% RH

Store printouts on EPSON Photo Quality Glossy Film and Self Adhesive Sheets under these conditions:
Temperature: 59 to 86 °F (15 to 30 °C)
Humidity: 20 to 60% RH

**Printable area**

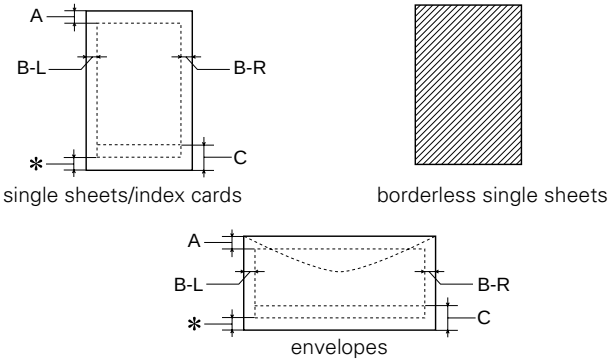


A: For envelopes, index cards, and sheets printed with borders, the minimum top margin is 0.12 inch (3.0 mm).

B-L: The minimum left margin for envelopes, index cards, and sheets printed with borders is 0.12 inch (3.0 mm).

B-R: The minimum right margin is 0.12 inch (3.0 mm) for index cards and single sheets with borders; 0.28 inch (7.0 mm) for DL envelopes; 1.10 inch (28.0 mm) for No. 10 envelopes.

C: The minimum bottom margin for envelopes, index cards, and single sheets with borders is 0.55 inch (14.0 mm).

* You can reduce the minimum bottom margin to 0.12 inch (3.0 mm) by selecting Maximum as the Printable Area setting. However, print quality may decline or ink may smear in the expanded area, depending on the media. Before printing large jobs, print a single sheet to confirm print quality.

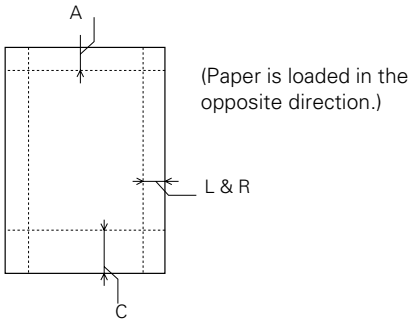


EPSON 4 × 6-inch Photo Paper* with perforations (dotted lines indicate perforations)

A: The maximum top margin is 0.24 inch (6.1 mm).

L & R: The maximum left and right margin is 0.24 inch (6.1 mm). The minimum left and right margin is 0.12 inch (3.0 mm).

C: The maximum bottom margin is 0.67 inch (17.0 mm).

* EPSON 4 × 6-inch Photo Paper (perforated) is 4.5 × 6.9 inches (114 × 175 mm), including the perforated margins. The printable area is 4 × 6 inches (102 × 152 mm).

## Control Panel

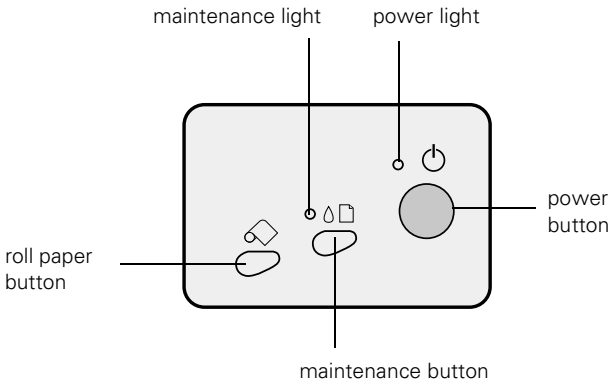

The following table explains the control panel lights:

| | |
|---|---|
| ⏻ is on or flashes | The ⏻ power light is on when the printer is on and ready to print. It flashes when the printer is receiving a print job, charging ink, or cleaning the print head. It also flashes when the print head moves to the ink cartridge replacement position |
| is on and ⏻ flashes | When the maintenance light comes on and the ⏻ power light flashes, paper is out or loaded incorrectly, or you have a paper jam.<br>If paper is out or loaded incorrectly, load or reload your paper. Then press the maintenance button to turn off the maintenance light and resume printing. (If you're printing on roll paper, press the maintenance button to turn off the maintenance light, and then press the roll paper button to resume printing.)<br>If paper is jammed, do one of the following:<br>❏ If you're printing on any type of media but roll paper, press the maintenance button to try to clear the jam. If that doesn't work, turn off the printer and gently pull the paper forward (toward the output tray) to pull it out. Then turn on the printer and press the maintenance button to turn off the maintenance light and resume printing.<br>❏ If you're printing on roll paper, press the roll paper button for at least three seconds to clear the jam. (You may have to repeat this step more than once to back the paper out completely.) If that doesn't work, turn the printer off and trim the roll at a point a few inches after it exits the printer. Gently pull the roll backward, taking care not to force the printer mechanism. |
| ⏻ and flash | When both the lights flash, one of the ink cartridges is low on ink. To find out which one, do the following:<br>Windows: Check the ink level graphic in the printer software.<br>Macintosh: Check the EPSON Monitor 3 utility.<br>Then replace the ink cartridge as described on page 8. |
| and ⏻ are on | When both lights are on, one of the ink cartridges is out of ink. Determine which cartridge is empty by checking the ink level graphic in the printer software (Windows) or the EPSON Monitor 3 utility (Macintosh). Then replace the cartridge as described on page 8. If both lights come on after you've replaced a cartridge, you may have installed a cartridge your printer can't use. |
| is on and ⏻ is off | Jammed paper may be blocking movement of the print head, or you may have an internal error. Turn off the printer, open the cover, and check for any jammed paper. Also, make sure you removed all the packing material, as described on the *Start Here* poster. Then turn the printer back on. |
| ⏻ and are off | When both lights are off, the printer is not receiving power. Try these solutions:<br>❏ Make sure the printer is turned on.<br>❏ Turn off the printer, plug in the power cord securely, and turn on the printer again.<br>❏ Make sure the outlet is working and is not controlled by a switch or timer. |

## Installing an Ink Cartridge for the First Time

CAUTION

Follow these ink cartridge precautions and the others in the *Printer Basics* book:

❏ Install both ink cartridges, and leave them installed for all types of printing, or the printer won't work.

❏ Remove the yellow tape seal from the top of the ink cartridges or you'll permanently damage them. Don't remove the clear seals on the bottom or ink will leak out.

❏ Don't touch the green chip on the back of the cartridge. This may inhibit normal operation and printing.

❏ Never turn off the printer when the ⏻ power light is flashing, unless the printer hasn't moved or made any noise for more than five minutes.

WARNING

Keep ink cartridges out of the reach of children and do not drink the ink.

If ink gets on your skin, wash the area thoroughly with soap and water. If ink gets in your eyes, flush them immediately with water.

1. Plug the printer into an electrical outlet and turn it on. The ink cartridges move into the loading position.

NOTE

If the ink cartridges fail to move to the loading position, press the ink cartridge replacement button, shown below.

2. Lower the output tray and open the cover.

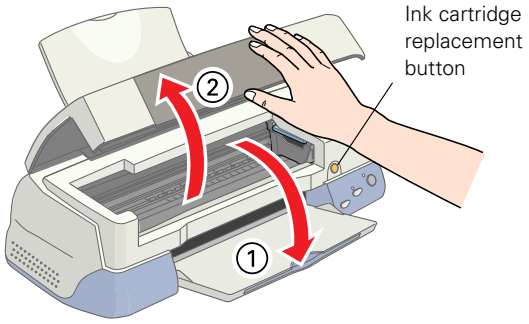

3. Lift up the two ink cartridge clamps.

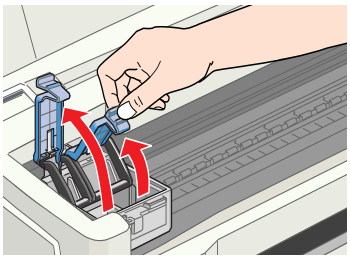

4. Unwrap the ink cartridges, then remove only the yellow part of the tape seal on top. **Don't pull off the blue part.**

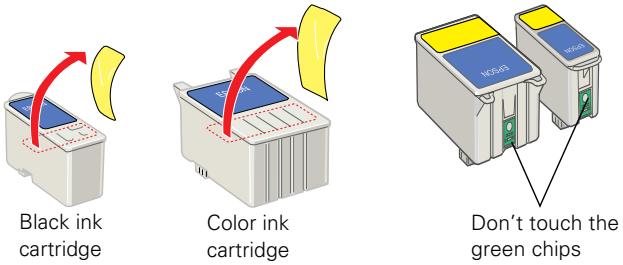


5. As you face the printer, tilt each cartridge forward (toward you) slightly as you lower it into its holder. Position the tabs at the back of the cartridge on top of the hooks on the holder clamps.

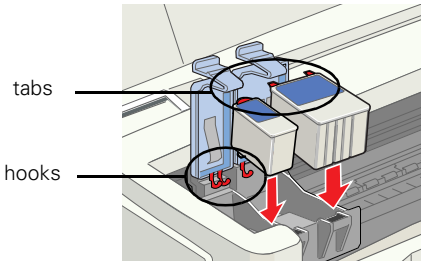


CAUTION Don't place the cartridges *under* the holder clamp; you may damage the clamp when you close it.

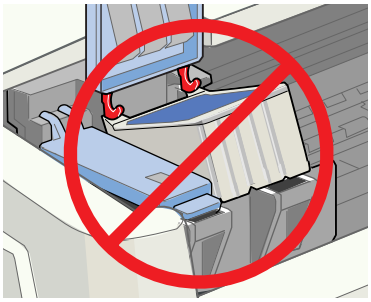

6. Close the ink cartridge clamps. (You need to press the color clamp a little more firmly.)

7. Press the ink cartridge replacement button (shown in step 2) and close the printer cover.

Ink charging takes about two minutes, with the ⏻ power light flashing and the printer making noise until it's finished. Don't turn off the printer or interrupt charging or it will start over, using more ink than necessary. It's finished when the ⏻ power light stops flashing.

## Testing the Printer

You can run a printer check to determine whether a problem comes from the printer itself or some other source. Follow these steps to run the printer check:

1. Make sure both the printer and computer are turned off.
2. Disconnect the interface cable from the printer.
3. Make sure letter-size or larger paper is loaded in the printer.
4. Hold down the maintenance button, then press and release the ⏻ power button. Continue holding down the maintenance button until the ⏻ power light starts to flash, then release it.

   The printer prints one page showing its ROM version number, ink counter, and a nozzle check pattern. Only the nozzle check pattern is shown below. (If the pattern has gaps in its dots, you need to clean the print head; see page 10.)

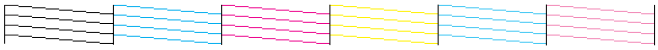

5. To end the check, turn off the printer after it prints the check page. Then reconnect the interface cable and turn on your printer and computer.

If the check page prints, the problem probably lies in your software settings, the interface cable, or your computer.

If the check page doesn't print, you may have a problem with your printer.

Try the suggestions in "Problems and Solutions" in the *Printer Basics* book.

## Printing on Special Media

Follow the guidelines in the table below when selecting the Media Type setting for your paper:

| For this paper name... | Select this Media Type setting |
|---|---|
| Plain paper and envelopes | Plain paper |
| EPSON 360 dpi Ink Jet Paper<br>EPSON Iron-On Cool Peel Transfer Paper | 360 dpi Ink Jet Paper |
| EPSON High Quality Ink Jet Paper<br>EPSON Photo Quality Ink Jet Paper<br>EPSON Photo Quality Ink Jet Cards<br>EPSON Photo Quality Self Adhesive Sheets | Photo Quality Ink Jet Paper |
| EPSON Matte Paper - Heavyweight | Matte Paper - Heavyweight |
| EPSON Photo Paper | Photo Paper |
| EPSON Premium Glossy Photo Paper<br>EPSON Premium Semigloss Photo Paper<br>EPSON Premium Luster Photo Paper | Premium Glossy Photo Paper |
| EPSON Photo Quality Glossy Film<br>EPSON Photo Stickers | Photo Quality Glossy Film |
| EPSON Ink Jet Transparencies | Ink Jet Transparencies |
| EPSON Photo Quality Glossy Film<br>EPSON Photo Stickers | Photo Quality Glossy Film |
| EPSON Ink Jet Transparencies | Ink Jet Transparencies |

### Additional Media Loading Guidelines

CAUTION Don't use the cleaning sheets that may be included with your special media; they may damage the printer.

- ❏ Be sure to load the printable (whiter) side of the media face up in the sheet feeder.
- ❏ You can load paper up to the arrow mark on the left edge guide.
- ❏ In addition to the Media Type option, remember to select the correct Paper Size for your media in the printer software.
- ❏ If the special media has protective sheets between each sheet of media, be sure to remove the protective sheets before printing.
- ❏ Some special media have a cut corner that you need to position correctly; follow any instructions in the package. Always handle sheets by the edges, and don't touch the printable surface.

## Replacing an Ink Cartridge

When the maintenance and power lights are both flashing, one of your ink cartridges is low on ink. This is a good time to make sure you have a new cartridge. When both lights stay on, a cartridge is empty and you need to replace it.

When an installed ink cartridge is more than six months old, you may also need to replace it if you notice that your printouts don't look as good as they used to. If print quality doesn't improve after cleaning and aligning the print head, you can replace the cartridge even if the maintenance and power lights aren't flashing.

To check the level of ink you have left, see the graphic in the printer driver (Windows) or click the ink level icon in the printer driver or EPSON Monitor 3 utility (Macintosh).

You can also check the flash pattern of the control panel lights to determine which cartridge is low or empty. Press the ink cartridge replacement button. If the power and maintenance lights flash at the same speed, replace the black cartridge. If the maintenance light flashes twice as fast as the power light, replace the color cartridge.

CAUTION You cannot print if either ink cartridge is empty. Leave the empty cartridge installed in the printer until you have obtained a replacement. Otherwise the ink remaining in the print head nozzles may dry out.

Use these EPSON ink cartridges within six months of installing them and before the expiration date on the package:

- ❏ Black ink cartridge: T007201
- ❏ Color ink cartridge: T009201

CAUTION To ensure good results, use genuine EPSON ink cartridges and do not refill them. Other products may cause damage to your printer not covered by EPSON's warranty.

When you need new ink cartridges, contact your dealer or call the EPSON Store™ at (800) 873-7766 or visit the EPSON Store at www.epsonstore.com (U.S. sales only). In Canada, please call (800) 873-7766 for dealer referral.

Be sure you have a new ink cartridge before you begin. Once you start the ink cartridge replacement procedure, you must complete all the steps in one session.

Follow these steps to replace ink cartridges:

1. Make sure the printer is turned on and not printing (the power light should be on, but not flashing).

2. Open the printer cover and press the yellow ink cartridge replacement button. The print head moves left and the ⏻ power light begins flashing.

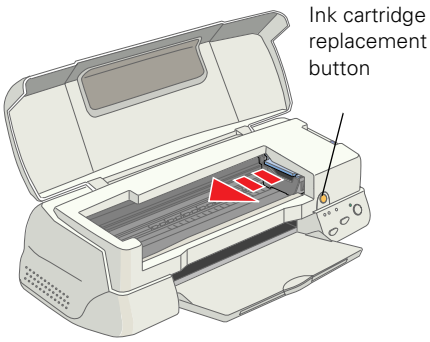


CAUTION To avoid damaging the printer, never move the print head by hand.

3. The color cartridge is on the right and the black cartridge is on the left. Pull up the ink cartridge clamp all the way. The cartridge rises up from its holder.

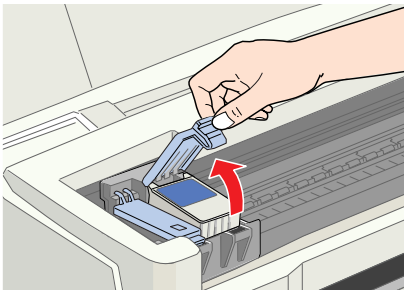

4. Lift the cartridge out of the printer and dispose of it carefully.

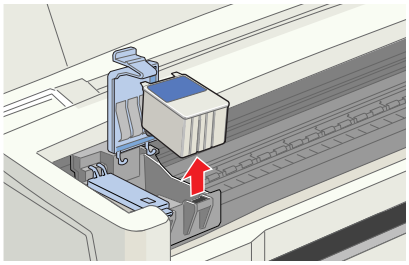

WARNING Keep ink cartridges out of the reach of children and do not drink the ink.

If ink gets on your skin, wash the area thoroughly with soap and water. If ink gets in your eyes, flush them immediately with water.

5. Unwrap the new ink cartridge, then remove only the yellow part of the tape seal on top. **Don't pull off the blue part.**

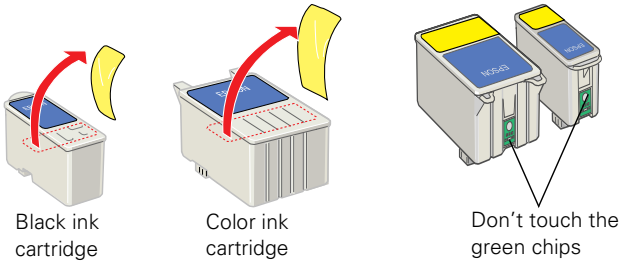


CAUTION You must remove the yellow tape from the top of the cartridge or you will permanently damage it. Don't pull off the blue portion or try to remove the clear seal underneath the cartridge.

Don't touch the green circuit board on the back of the cartridge; you may inhibit normal operation and printing.

6. As you face the printer, tilt the ink cartridge forward (toward you) slightly as you lower it into its holder.

Position the tabs at the back of the cartridge on top of the hooks on the holder clamps.

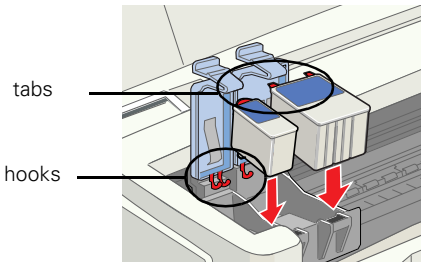


CAUTION Don't place the cartridge tabs *under* the hooks on the holder clamp; you may damage the clamp when you close it.

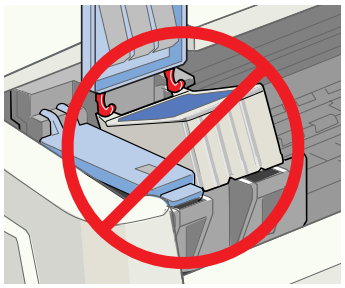

7. Press down on the ink cartridge clamp until it locks in place. (You may have to press a little more firmly on the color clamp.)

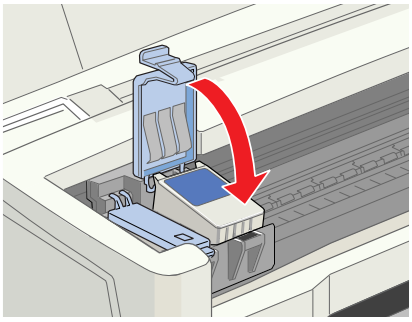

8. If you need to replace the other ink cartridge, repeat steps 3 through 7 before continuing with step 9.
9. Press the ink cartridge replacement button and close the printer cover. The printer moves the print head and begins charging the ink delivery system.

   The ⏻ power light flashes, and the printer makes noise. Charging takes about one minute. When it's finished, the ⏻ power light stops flashing and stays on.

CAUTION Never turn off the printer while the ⏻ power light is flashing, unless the printer hasn't moved or made noise for more than 5 minutes.

## Cleaning the Print Head

If your printed image is unexpectedly light or faint, or dots are missing from the image, you may need to clean the print head. This unclogs the nozzles so they can deliver ink properly.

Cleaning the print head uses ink, so clean it only if print quality declines. You can clean the print head in either of the following ways:

- ❏ Using the Head Cleaning utility (when the printer is connected to a local port, not over a network)
- ❏ Using the printer's control panel buttons

CAUTION When you don't turn on your printer for a long time, the print quality can decline. It's a good idea to turn on your printer at least once a month to maintain good print quality.

### Using the Head Cleaning Utility

Follow these steps to run the Head Cleaning utility (recommended method):

1. Make sure the printer is turned on but not printing, and the maintenance light is off. (You can't clean the print head if the maintenance light is flashing or on. Replace the appropriate ink cartridge instead.)
2. If you have an application running, access the printer settings dialog box.

   Or, with Windows, click Start, point to Settings, then select Printers. Right-click your EPSON Stylus Photo 1280 printer icon in the Printers window. Then select Properties (Document Defaults in Windows NT).
3. **Windows:** Click the Utility tab.

   **Macintosh:** Click the Utility button.
4. On the Utility menu, click the Head Cleaning button.
5. Follow the instructions on the screen to clean the print head. Cleaning takes about 30 seconds, during which the printer makes some noise and the ⏻ power light flashes.

CAUTION Never turn off the printer while the ⏻ power light is flashing, unless the printer hasn't moved or made noise for more than 5 minutes.

6. When the ⏻ power light stops flashing, run a nozzle check to confirm the print head nozzles are clean.

   Make sure paper is loaded in the printer and click Print nozzle check pattern (Windows) or Confirmation (Macintosh). Then click Next. The nozzle check pattern prints. (See page 11 for details.).
7. If the nozzle check pattern has no gaps in its dots, click Finish.

   If the pattern is missing dots, click Clean to clean the print head again. If you don't see any improvement after cleaning three or four times, check the solutions in the *Printer Basics* book. You can also turn the printer off and wait overnight—this allows any dried ink to soften—and then try cleaning the print head again.

### Using the Control Panel to Clean the Print Head

Follow these steps to clean the print head:

1. Make sure the printer is turned on but not printing, and the maintenance light is off. (If the maintenance light is on or flashing, replace the appropriate ink cartridge instead.)

2. Press the maintenance button and hold it down for three seconds. Cleaning takes about 30 seconds, during which the printer makes some noise and the power light flashes.

   CAUTION Never turn off the printer while the power light is flashing, unless the printer hasn't moved or made noise for more than 5 minutes.

3. After the power light stops flashing, do one of the following:

   If your printer is connected directly to the computer, go to step 4 to run a nozzle check.

   If you're printing over a network, open an application and print a short document containing black and color data. Check the quality of your printout, then go to step 8.

4. If you have an application running, access the printer settings dialog box.

   Or, with Windows, click Start, point to Settings, then select Printers. Right-click your EPSON Stylus Photo 1280 printer icon in the Printers window. Then select Properties (Document Defaults in Windows NT).

5. **Windows**: Click the Utility tab.

   **Macintosh:** Click the Utility button.

6. Make sure paper is loaded in the printer, click the Nozzle Check button, and click Next. The nozzle check pattern prints. (See the next section for details.)

7. If the nozzle check pattern has no gaps in its dots, click Finish.

   If the pattern is missing dots, click Clean to clean the print head again.

8. If you don't see any improvement after cleaning three or four times, check the solutions in the *Printer Basics* book. You can also turn the printer off and wait overnight—this allows any dried ink to soften—and then try cleaning the print head again.

### Examining the Nozzle Check Pattern

Examine the nozzle check pattern you print. It should look something like this:

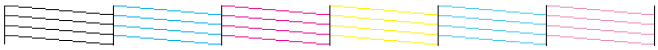

Each staggered horizontal and straight vertical line should be complete, with no gaps in the dot pattern. If your printout looks okay, you're done. If any dots are missing, as shown below, clean the print head again; see page 10 for instructions.

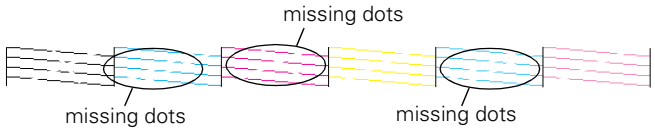


## Aligning the Print Head

If your printouts contain misaligned vertical lines, you may need to align the print head. Your printer must be connected to a local port, not on a network, to use the Print Head Alignment utility. Follow these steps:

1. Make sure the printer is turned on but not printing, and letter-size paper is loaded.

   CAUTION Load letter or A4-size paper to print the entire bidirectional pattern.

   For the best results, load EPSON ink jet paper in the printer whenever you check the print head alignment.

2. If you have an application running, access the printer settings dialog box.

   Or, with Windows, click Start, point to Settings, then select Printers. Right-click the EPSON Stylus Photo 1280 icon in the Printers window. Select Properties (Document Defaults in Windows NT).

3. **Windows**: Click the Utility tab.

   **Macintosh**: Click the Utility button.

4. You see the Utility menu. Click the Print Head Alignment button.

5. Follow the instructions on the screen to print a test page.

6. Select the best line from the first group of lines on the printout, then enter its number in box #1 on screen. Select the line with the cleanest, straightest edges. Then choose the best line in the second group and enter its number in box #2 on screen.

7. If you want to check the results, click Realignment to print another test page. Make sure the middle line (numbered 8) in each group is the best. If it isn't, you may need to repeat step 6 more than once to align your print head completely.
8. Click Next and follow the instructions on the screen to print two columns of boxes.
9. Select the box with the least grainy appearance (smoothest gray) from the first column, then enter its number in box #1 on screen. Then choose the best box from the second column and enter its number in box #2 on screen.
10. If you want to check the results, click Realignment to reprint the boxes. Make sure the middle box (numbered 5) in each column is the best. If it isn't, you may need to repeat step 9 more than once.
11. When done, click Finish.

## Cleaning the Printer

To keep your printer working at its best, you should clean it several times a year. Follow these steps:

1. Turn off the printer and wait for the ⏻ power light to go out.
2. Unplug the power cord and disconnect the printer cable.
3. Remove all the paper from the sheet feeder.
4. Clean the exterior of the printer with a soft, damp cloth.

CAUTION

Don't touch the gears inside the printer.

Never use a hard or abrasive brush, or alcohol or thinner for cleaning; they can damage the printer components and case.

Don't get water on the printer components and don't spray lubricants or oils inside the printer.

## Transporting the Printer

If you move your printer some distance, you need to prepare it for transportation in its original box or one of a similar size.

CAUTION

To avoid damage, always leave the ink cartridges installed when transporting the printer.

Be sure to remove the tape used in step 4 after installing the printer in its new location.

Follow these steps:

1. Turn on the printer, wait until the print head locks in the far right position, then turn off the printer.
2. Unplug the power cord from the electrical outlet. Then disconnect the printer cable from the printer.
3. Remove any paper from the printer and remove the paper support.
4. Open the printer cover. Secure the ink cartridge holder to the printer with tape as shown, then close the printer cover.

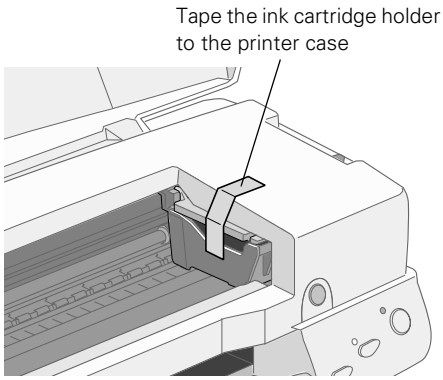


5. Push in the output tray extensions and close the tray.
6. Repack the printer and attachments in the original box using the protective materials that came with it. See the *Start Here* poster for details.

Be sure to keep the printer level as you transport it.

After transporting the printer, remove the tape securing the print head and test your printer. If you notice a decline in print quality, clean the print head (see page 10); if output is misaligned, align the print head (see page 11).

## Related Documentation

| | |
|---|---|
| TM-890/1280 | EPSON Stylus Photo 890/1280 Service Manual |
| PL-SP1280 | EPSON Stylus Photo 1280 Parts Price List |
| CPD-11716 | EPSON Stylus Photo 890/1280 *Printer Basics* |
| CPD-11717 | EPSON Stylus Photo 890/1280 *Start Here* |
| CPD-11718 | EPSON Stylus Photo 1280 printer software CD-ROM |